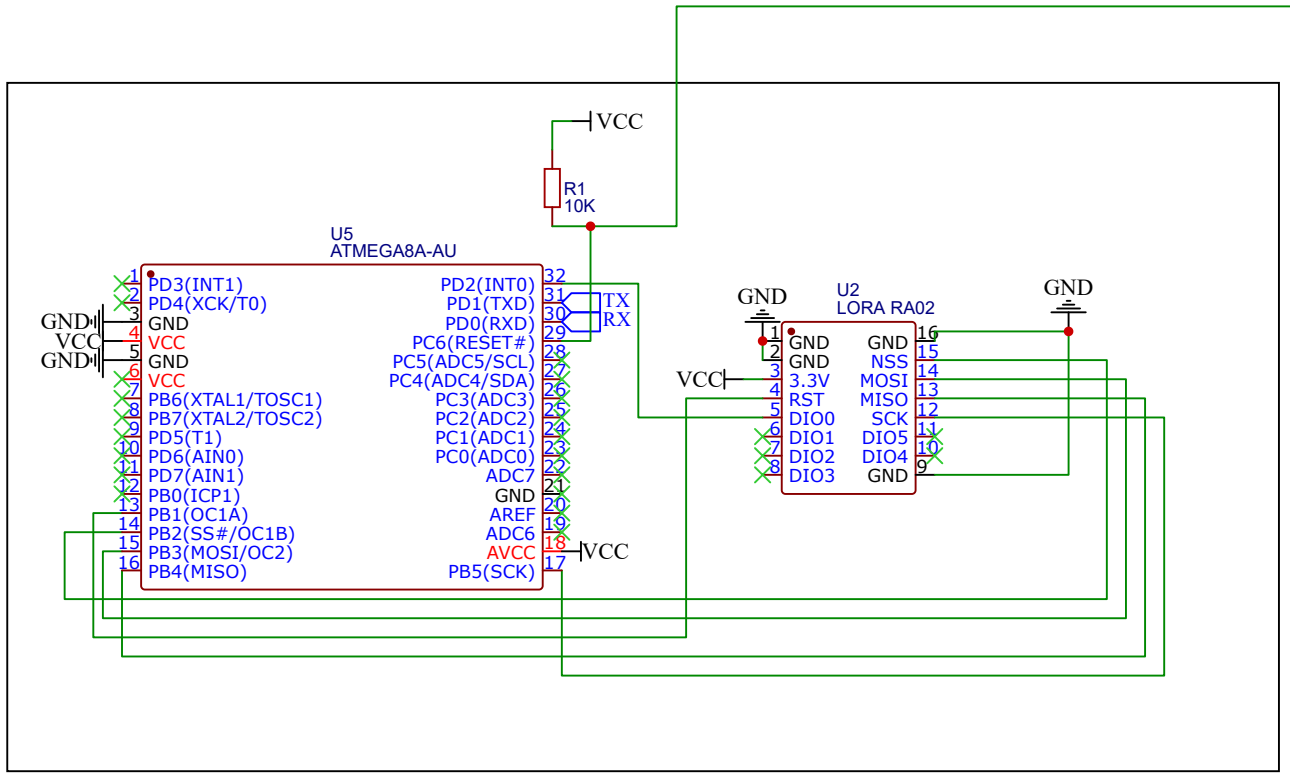

ATMEGA328p and ra02

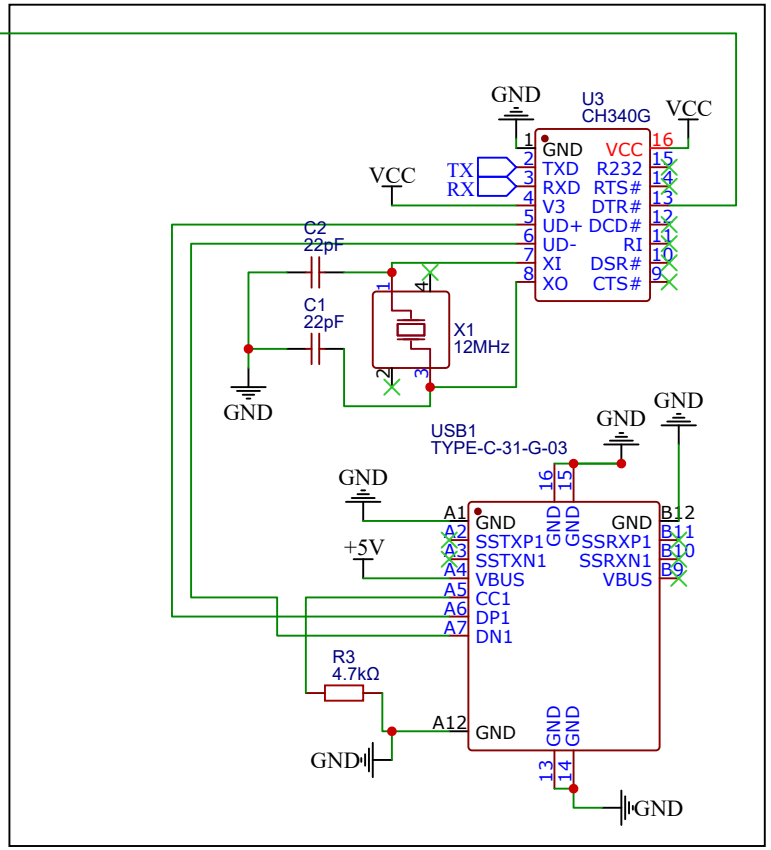

USBC and UART to USB

Pin header

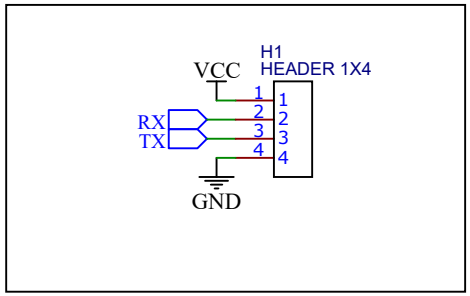

5V to 3.3v

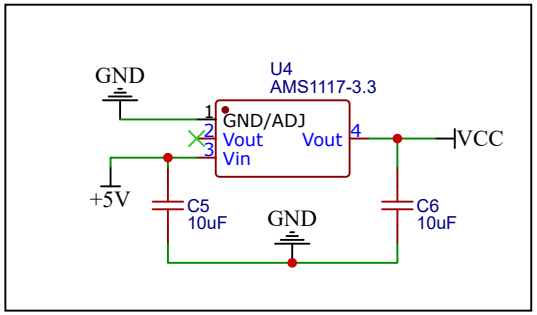

TITLE: Lome Main		REV: 1.0
EasyEDA	Company: xamuel.xyz	Sheet: 1/1
	Date: 2022-01-26 Drawn By: Samuel Menéndez	